Electronic Design

HOWARD ZOU, Senior Field Applications Engineer,
and GENE LI, Staff Field Applications Engineer,
Analog Devices Inc.

Achieve Safe Battery Paralleling with Bidirectional Power for Robotics

Safely paralleling dual battery packs with bidirectional current flow is a common issue in humanoid-robot power architectures. Even harder is paralleling batteries while realizing soft-start.

Humanoid robots are rapidly evolving into heavy-duty, battery-powered systems with highly variable loads. Full-size humanoid robots can consume around 500 W to maintain balance while standing still, and peak power can exceed 10 kW during more dynamic movements such as jumping. Delivering all of that power efficiently, reliably, and safely is a constant issue for engineers — and it's not getting any easier to solve.

To address these challenges, modern designs increasingly adopt dual-battery architectures to improve reliability, reduce system downtime, and enable hot-swapping capabilities. The capacitance on the DC bus is also large to keep the bus voltage stable.

However, this trend introduces two critical system-level problems:

- How can two battery packs be safely connected in parallel while still allowing bidirectional current flow between the batteries and the motor joints inside the robot?
- How can large DC bus capacitance be powered up without causing excessive inrush current soft-start?

Battery Paralleling with Reverse-Current Capability

Directly paralleling two battery packs isn't safe, as small voltage mismatches (tens or hundreds of millivolts) can cause large circulating currents. A straightforward solution is to add an ideal diode. It can isolate the two battery packs and achieve seamless power switchover without firmware intervention. However, the ideal diode blocks the reverse current when the motor brakes.

This approach will cause the DC bus to rise and may cause it to exceed the maximum voltage rating of the devices connected to the bus. It's common to add a brake chopper to dissipate regenerative energy and clamp the DC bus voltage *(Fig. 1)*. When the DC bus rises, the chopper will conduct, and the energy will be dissipated on the resistor. The heat put out by the resistor brings more difficulties for thermal management in robots. It's also inherently inefficient to do so.

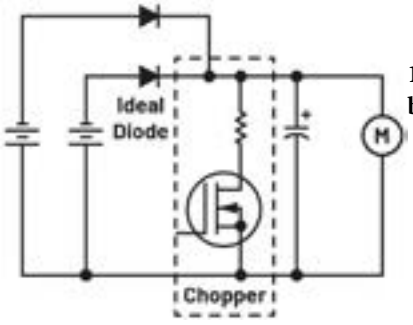

1. Paralleling battery with diode.

Is there a way to connect two battery packs safely while allowing the current to flow bidirectionally, either from the battery to the motor or the motor to the battery? One solution is to adopt a fast, high-side N-channel MOSFET gate driver that operates from high input voltages.

One example is the LTC7000, which works with input voltages up to 135 V. The device contains an internal charge pump that fully enhances an external N-channel MOSFET switch, allowing it to remain on indefinitely.

The powerful driver inside the LTC7000 can easily drive large gate capacitances with very short transition times, suiting it for static switch applications like robot power management that require a fast turn-on and/or turn-off time. It also has integrated overcurrent protection (OCP) and input overvoltage lockout (OVLO). With these features, the redundant supply of two battery packs can be configured as shown in *Figure 2*.

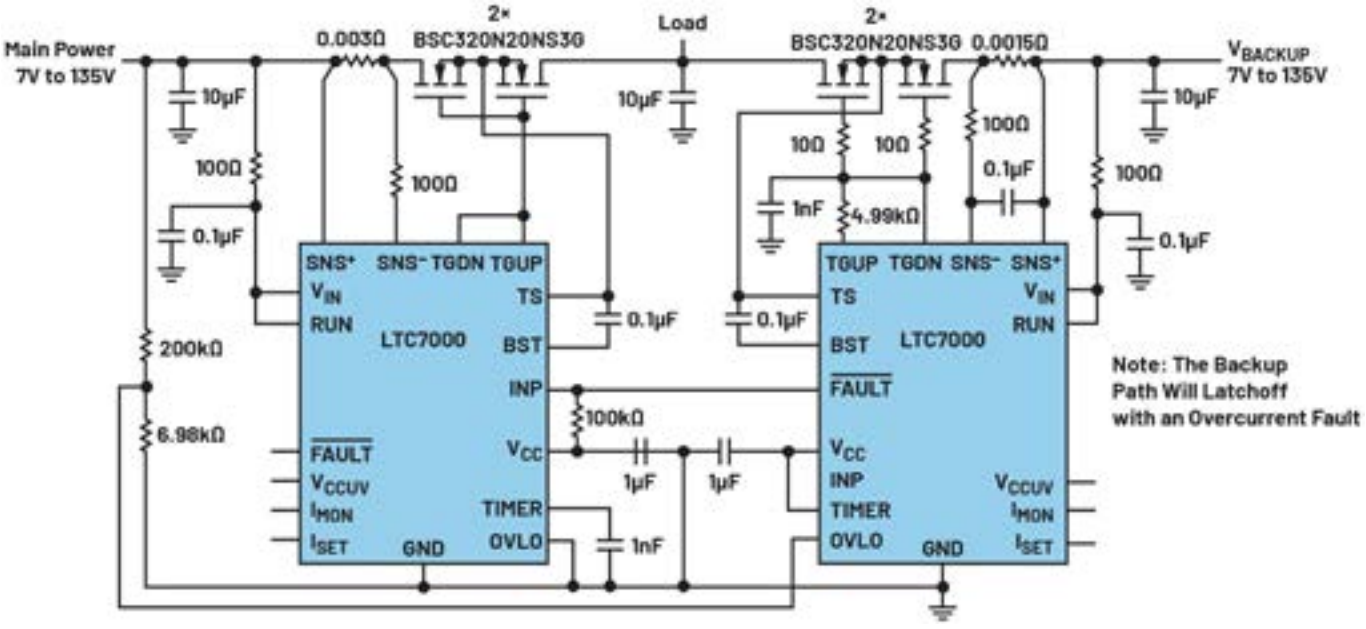

2. Redundant supply switchover with shoot-through protection.

When the main power voltage falls, OVLO on the right side will be low (1.10 V, typ, falling) and then VTGUP – VTS will rise. Since the TIMER pin is connected to VCC, the FAULT pin will be pulled low when the VTGUP – VTS signal is driven high. The FAULT pin on the right side is connected to INP on the left side, so INP LOW will cause TGDN to fall. Then, the main power MOSFET will be turned off.

The VTGUP – VTS rise will also turn on the backup power MOSFET. The switchover of the supply is automatically achieved when the main power falls. The backup path will latch off with an overcurrent fault. *Figure 3* shows the waveform when the main power falls from 40 V to 0 V. The MOSFET won't turn on at the same time.

When a new charged main battery pack is inserted into a robot, main power rises, and the procedure is just the opposite of main falling.

When the main power voltage rises, OVLO on the right side will be high (1.21 V, typ, rising) and then the VTGUP – VTS will fall. Since the TIMER pin is connected to VCC, the FAULT pin will pull high when the VTGUP – VTS signal is driven low. The FAULT pin on the right side is connected to INP on the left side, so INP high will cause TGUP to rise. The main power MOSFET will be turned on.

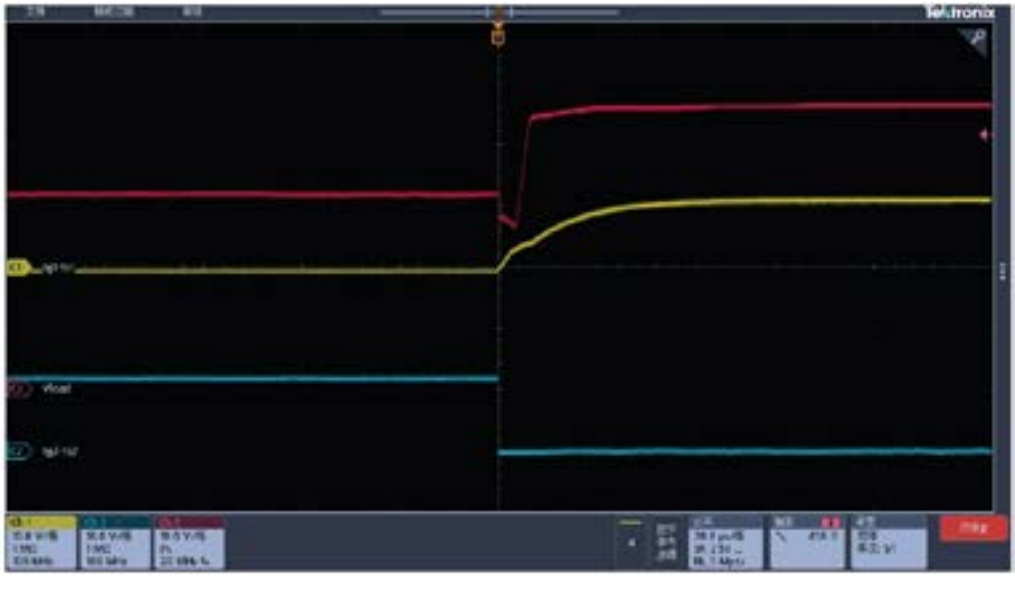

3. V_{MAIN} falling through 33 V with 50-Ω load (40 V_{MAIN} to 48 V_{BACKUP} switchover).

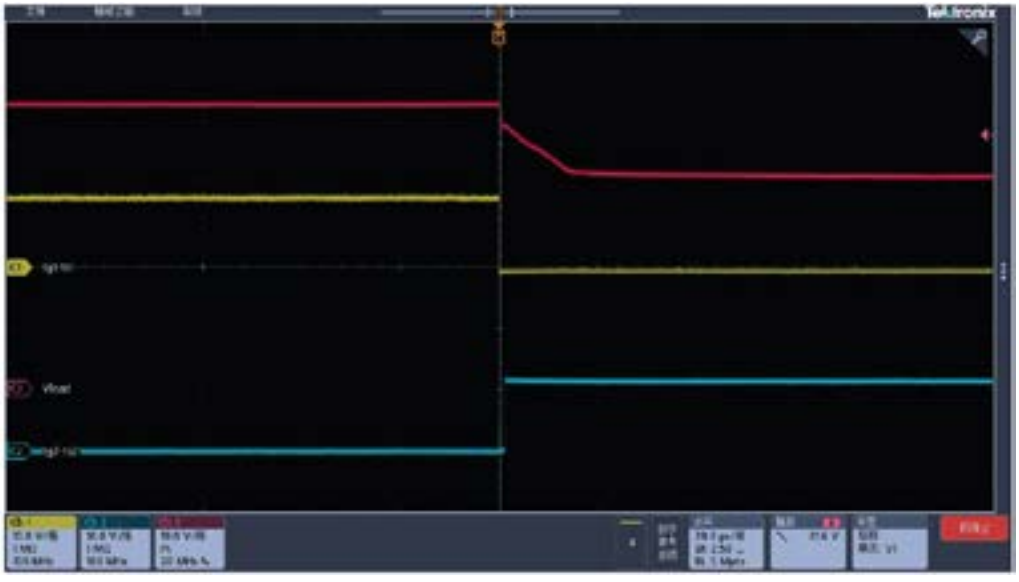

4. V_{MAIN} rising through 36 V with 50-Ω load (48 V_{BACKUP} to 40 V_{MAIN} switchover).

The VTGUP – VTS fall will also turn off the backup power MOSFET. The switchover of the supply is automatically achieved when the main power rises. With the parameters of *Figure 2*, the input OVLO rising threshold is 35.9 V, and the falling threshold is 32.6 V. It was tested with the backup battery at 48 V, the main battery at 40 V, and the load at 50 Ω.

Figure 4 shows the waveform when the main power rises from 0 V to 40 V.

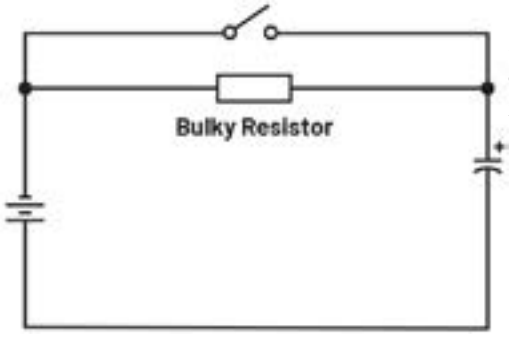

5. Limit inrush current with a resistor.

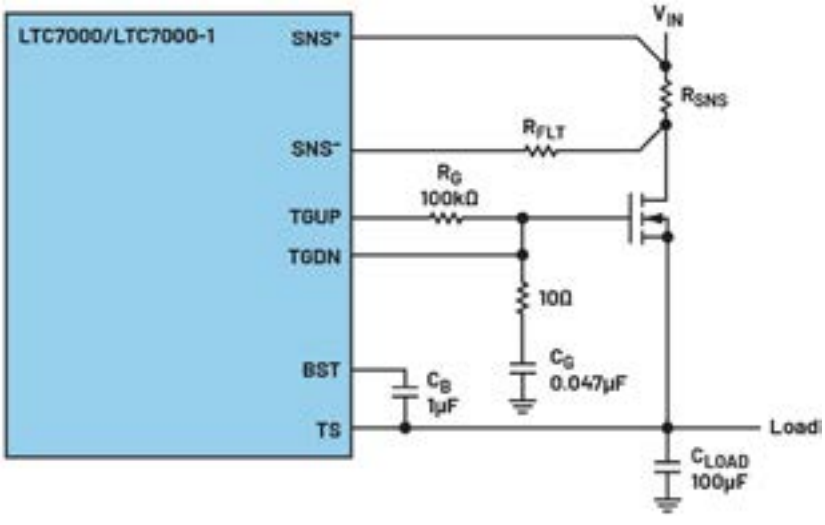

6. Powering large capacitive loads with a LTC7000-controlled MOSFET.

Achieving Soft-Start Up with Large Capacitive Loads

A full-size humanoid robot typically contains 25 to 40 actuated joints, excluding the hands. Each joint has its own DC bus capacitor and is connected to the main battery through wires.

The capacitor can help keep the bus voltage stable during large transients. Although each capacitor isn't that large, the total capacitance on the DC bus can be as large as tens of microfarads. Powering up these capacitors directly can cause large inrush current. If it exceeds the current-carrying capability of board connectors as well as PCB traces, the connectors and traces could be damaged.

Large inrush current could also age the battery and capacitors in the system,

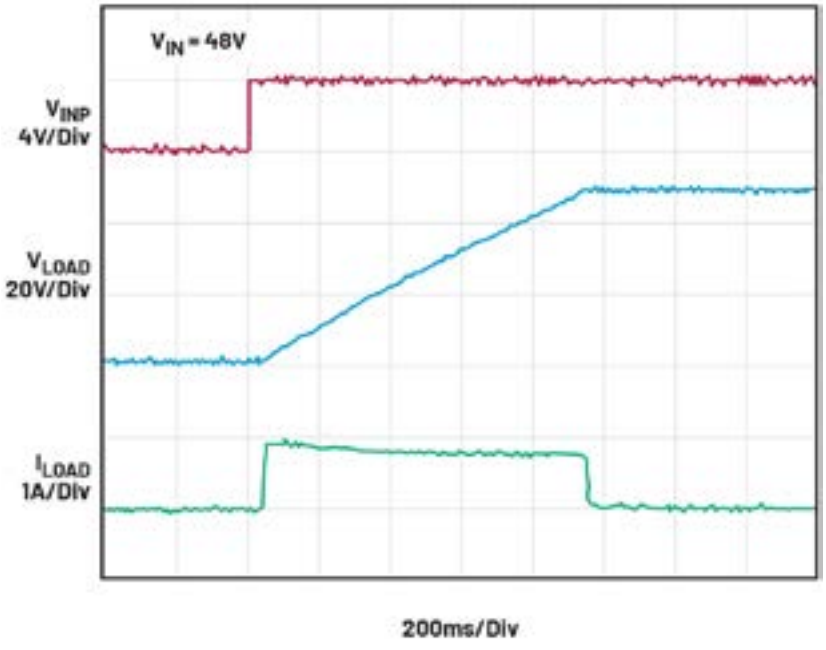

7. Test result when R_G = 220 kΩ, C_G = 0.47 µF, C_{LOAD} = 15 mF, V_{IN} = 48 V, INP pulled high at 0.4 s.

causing reliability issues. Take care when powering up such a large capacitance load.

A common way to limit the inrush current is to add a current-limit resistor in the power path (*Fig. 5)*. After the capacitor is fully charged, the resistor is then bypassed through a switch. However, the resistor could be bulky and inefficient.

The LTC7000-controlled MOSFETs can achieve current limiting in a better way. As shown in *Figure 6*, the pull-up gate drive to the power MOSFET from TGUP is passed through an RC delay network, R_G and C_G, which greatly reduces the turn-on ramp rate of the MOSFET.

Since the MOSFET source voltage follows the gate voltage, the load is powered smoothly from ground. This dramatically reduces the inrush current from the source supply and reduces the transient ramp rate of the load, allowing for slower activation of sensitive electrical loads. The turn-off of the MOSFET isn't affected by the RC delay network, as the pull-down for the MOSFET gate is directly from the TGDN pin.

The values for R_G and C_G to limit the inrush current can be calculated from this equation:

$$IIN_RUSH \cong 0.7 \times 12V \times C_{LOAD}/(R_G \times C_G) \quad (1)$$

This assumes that the V_{GS} of the external MOSFET is almost constant at 0.3 × 12 V during the Miller plateau. The test results of inrush current and voltage on a 15-mF capacitor are shown in *Figure 7*. The inrush current is limited to about 870 mA with R_G = 220 kΩ, C_G = 0.47 µF.

Boosting the Battery Power Behind Humanoid Robotics

Humanoid robots are evolving into battery-powered mobile systems with high power demands and complex electrical challenges. Managing power supply, inrush current, and regenerative braking efficiently is critical to their safe and effective operation. With LTC7000, it's easy to achieve parallel connection of dual battery packs as well as bidirectional current flow. And inrush current can be controlled without affecting the shutdown time.

Howard Zou joined ADI as a senior field applications engineer in Shenzhen, China, in 2023. He covers the industrial market, including robotics, industrial automation, and battery management.

Gene Li joined ADI as an applications engineer in Shenzhen, China, in 2023. He focuses on power products.