Informed Analysis Picks Better 555 Timer To Drive Power MOSFET

MICHAEL A. COVINGTON | Covington Innovations, Athens, Ga., mc@covingtoninnovations.com

THE ORIGINAL BIPOLAR 555 timer, the NE555, is excellent for driving a power MOSFET's gate. Newer CMOS versions such as the 7555, LMC555, and TLC555 use less power, but they have trouble sourcing enough current to drive a gate well and can even be damaged by load mismatch.

The figure shows part of a pulse-width-modulated dimmer for a 12-V incandescent lamp. It originally used a CMOS TLC555, which kept failing with an open output pin as the failure mode. In addition, the MOSFET (an IRF 4905) ran hot. Pin 3 of the 555 was connected directly to the MOSFET gate.

Examination with an oscilloscope showed that the gate voltage had a rise and fall time of about 2 µs and that the pulse-width modulation (PWM) switching frequency was about 100 kHz, so about 40% of each cycle was spent on the rise and fall. That explained why the MOSFET was running hot. Much of the time, it was neither fully on nor fully off, but in the lossy intermediate-state switching-transition mode.

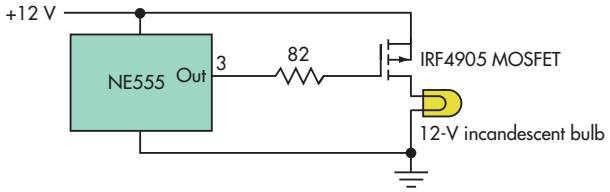

A CMOS TLC555 can't source enough current to charge the gate rapidly and was damaged by being connected directly to the gate (a 3500-pF capacitive load). But a bipolar NE555 with an added 82-Ω protective resistor drives the IRF4905 MOSFET safely and reliably.

The input capacitance of the IRF 4905 is typically 3500 pF. Using the well-known current-charging equation $I = C\,dV/dt$, we find that the gate charging and discharging current with a 12-V square wave is about 21 mA, twice the rated output of the CMOS 555. That explains the failures.

The solution was simple. The timer chip was changed to a bipolar NE555 (rated for 200-mA sink and source current), an 82-Ω resistor was added to guarantee that the current would always be below 150 mA, and the switching frequency was reduced to 3 kHz to reduce the proportion of time spent "on the slope." The resulting circuit performed more reliably, and the MOSFET did not even get warm.

MICHAEL COVINGTON, PhD, operates a consulting practice, Covington Innovations (www.covingtoninnovations.com), in Athens, Ga.

PLL Provides Ratiometric Capacitive Touch Switch For Appliances

M.S. NAGARAJ | Technical Consultant, msnagaraj.smartprojects@gmail.com

CAPACITIVE-BASED TOUCH-SENSOR SWITCHES ARE gaining popularity for appliance, automotive, and industrial applications for many reasons. They're aesthetically appealing, flexible, easy to manufacture, and easy to use. They avoid the need for buttons, sliders, and other parts needed in mechanical switches. They're also durable, since they don't have any moving parts.

Further, the absence of holes and other openings lowers the manufacturing cost. Surface contaminants and moisture have no effect on the quality of the switches. The front surface can be back-lit to indicate the switch status. And, the copper pads of the printed-circuit board (PCB) can be made to function as touch sensing plates.

The circuit in the figure uses two identical metal plates or copper pads on one side of a double-sided PCB as the sensing pads (SP_{On} and SP_{Off}). Sensing capacitors C_{On} and C_{Off} are formed by placing these sensing pads behind a thin, decorative overlaying cover film or plate of the switch. The overlay isolates the user from the mains voltage. Components C4, R9, Z1, D1, and C3 form a compact and low-cost transformerless power supply.

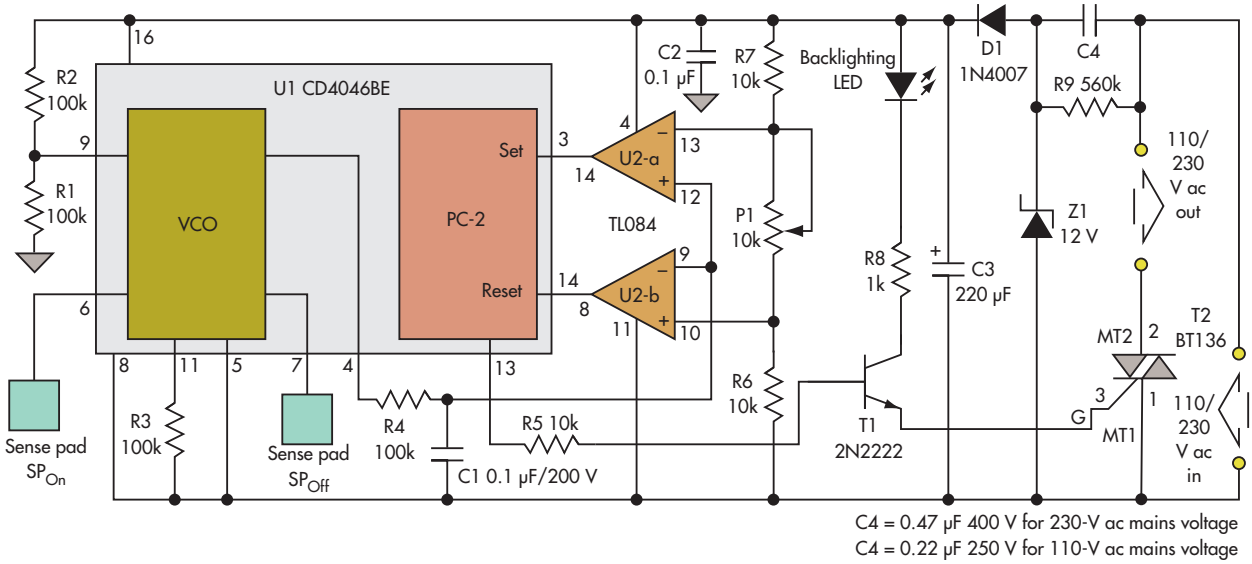

Based on a standard PLL IC, comparator, and triac, this circuit provides a low-cost capacitance touch switch for the ac line and is relatively insensitive to ambient temperature and dc-supply rail drift.

The capacitors act as the timing components of the voltage controlled oscillator (VCO) of a commonly used and inexpensive CMOS phase-locked loop (PLL) (CD4046). ON period T_{On} and OFF period T_{Off} of the square wave at the output of the VCO are determined by the values of the sense capacitors C_{On} and C_{Off}, respectively. Integrator R4C1 develops dc voltage V_{dc} proportional to the duty cycle (η) of the square-wave output:

$$V_{dc} = \text{duty cycle} \times \text{amplitude of the square wave}$$

where:

$$\eta = \text{duty cycle} = T_{On}/(T_{On} + T_{Off})$$

and:

$$\text{amplitude of the square wave} = 12\ \text{V}$$

Since the sensing pads are identical, the capacitors have equal values when the sensing pads are not touched. Hence, $T_{On} = T_{Off}$, duty cycle = 0.5, and V_{dc} = 6 V. The voltage divider formed by R6, P1, and R7 provides reference voltages $V_{Ref\text{-}hi}$ and $V_{Ref\text{-}lo}$ to voltage comparators $U_{2\text{-}a}$ and $U_{2\text{-}b}$.

When the sensing pad (SP_{On}) used for switching the appliance on is touched, the user's finger capacitance will be added to the value of C_{On}. This increases the values of T_{On}, the duty cycle, and the integrator output. Preset potentiometer P1 is adjusted so:

$$V_{Ref\text{-}hi} = (V_{dc} + V_{dc\text{-}on})/2$$

where V_{dc} and $V_{dc\text{-}on}$ are the integrator outputs when SP_{On} is untouched and touched respectively.

Thus, when SP_{On} is touched, the integrator output exceeds $V_{Ref\text{-}hi}$, and the output of comparator $U_{2\text{-}a}$ output goes high, setting the set-reset flip-flop, which is the phase comparator (PC-2) of the PLL IC. Similarly, when sensing pad SP_{Off} used for switching the appliance off is touched, the user's finger capacitance will be added to the value of C_{Off}. This increases the value of T_{Off} and decreases the values of duty cycle and the integrator output.

As R6 = R7, the reference voltage $V_{Ref\text{-}lo}$ tracks $V_{Ref\text{-}hi}$ such that:

$$(V_{Ref\text{-}hi} - V_{dc}) = (V_{dc} - V_{Ref\text{-}lo})$$

Hence, when SP_{Off} is touched, the integrator output falls below $V_{Ref\text{-}lo}$, and the output of comparator $U_{2\text{-}b}$ goes high and resets the set-reset flip-flop of the PLL IC. A high level on the flip-flop output drives triac T2 to switch on the electrical appliance connected to it. A low level at the flip-flop output switches off the appliance.

The variation in the ambient temperature causes equal percentage variation in the values of C_{On} and C_{Off} and hence in values of T_{On} and T_{Off}. The values of duty cycle and V_{dc} are not affected, so the touch sensitivity is not altered. Also, as $V_{Ref\text{-}hi}$, $V_{Ref\text{-}lo}$, and V_{dc} are all ratiometric to the supply voltage V_{dd}, the touch switch action is immune to the supply-voltage variations.

For better touch sensitivity, the area of the sensing pads should not be more than the area of contact of the finger with the sensor, as the finger capacitance (C_f) should be comparable to the untouched sensor capacitance (C_{un}). In addition, a thinner overlaying cover material produces a greater difference between the touched and untouched sensor pads.

M.S. NAGARAJ is a technical consultant with Smart Projects, Bangalore, India. Previously, he was a senior scientist at ISRO (Indian Space Research Organization) and technical vice-president (technical) at Biomedix Optotechnik.