BOB ZOLLO | Contributing Technical Expert
bob_zollo@agilent.com

Capacitor Challenges In Modulating DC Power

Engineers often face conflicting design goals. Take a design that requires an input capacitor to stabilize the bias voltage and present clean dc power to the device's circuits. During test, the device needs to be subjected to transients to see if it can tolerate disturbances on the dc input voltage.

You have to rapidly move the dc bias voltage to simulate noise or a dc disturbance. But with that large input capacitor on the device under test (DUT), rapidly changing the voltage will be hard. That capacitor was supposed to prevent rapid changes in voltage. Hence the conflict—how do you change the voltage during test when the capacitor is keeping that from happening?

THE RIGHT POWER SUPPLY

To test under transient conditions, you turn to a power supply that can rapidly change its output voltage. The table's first column lists the key specifications. But unless the transient condition is only up in voltage, you need to consider how fast the power supply can change its voltage in the downward direction, too.

To quickly change voltage downward, you need a power supply that can sink current back into the power supply to discharge that large input capacitor on the DUT to bring the capacitor voltage down to the desired voltage. You need a power supply with a down-programmer circuit, or a power supply with two-quadrant operation (source current and sink current) or even a four-quadrant supply.

POWER SUPPLY SPEED SPECIFICATIONS

Column 1: Look for one of these specifications to determine how fast your power supply can change upward from a lower voltage to a higher voltage	Column 2: Look for one of these specifications to determine how fast your power supply can change downward from a higher voltage to a lower voltage
Power supply programming speed	Power supply down-programming speed
Power supply settling time	Power supply down-programming settling time
Power supply up-programming speed	Power supply fall time
Power supply up-programming settling time	
Power supply rise time	

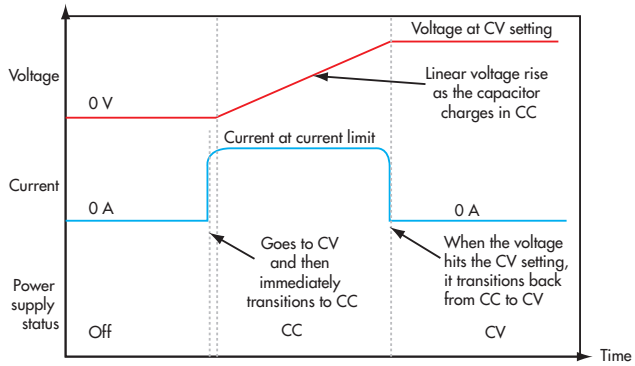

When charging a capacitor with a CV/CC supply, the supply will transition from CV to CC and then charge the capacitor with a constant current. The voltage on the capacitor will climb linearly until its voltage hits the CV voltage setting of the power supply. The supply will then cross over back into CV and the expected operation will continue.

The four-quadrant supply's voltage can swing from plus to minus, but that doesn't enable it to go fast. Instead, its ability to sink current (i.e., operate in the quadrant with positive voltage and negative current) allows it to rapidly pull the voltage down on the DUT's input capacitor. To determine if your power supply will be fast in the downward direction, look for the specifications called out in the second column of the table.

Once you have a fast power supply that can charge and discharge the input capacitor on the DUT, there are still other factors to consider. The voltage on the capacitor is governed by:

$$I = C * dV/dt$$

To rapidly change voltage at the required rate of volts per second (dV/dt), you need current. If you want to change the voltage faster, dV/dt gets larger, so the required current gets larger. And as the capacitor gets bigger, the current grows more. With the required current equal to the product of C and dV/dt, it can grow rapidly if you want to quickly change current across a large capacitor. Let's look at some examples.

CASE 1: CHARGING AN EMPTY CAPACITOR

When you first apply the dc bias power to charge a big, empty capacitor, it looks like a dead short. The power supply won't be able to instantaneously drive the voltage to the desired value. (Instantaneously means dV/dt is infinite so the required current is infinite.) So, the supply will go into current limit.

Assuming this is a constant voltage/constant current (CV/CC) supply, it will transition from CV to CC and charge the capacitor with a constant current. The voltage on the capacitor will climb linearly until its voltage hits the CV voltage setting of the power supply. The supply will then cross over back into CV and the expected operation will continue *(see the figure)*.

This may happen so quickly, you never notice the supply went from CV to CC, charged the capacitor, and then back into CV. If you want to see this, set your supply's current limit low and use a big capacitor. You'll be able to watch the CV to CC to CV state changes and see the linear charging on the capacitor

CASE 2: MODULATING DC

The capacitor has been charged and is sitting at its final dc voltage. Now you want to modulate the dc bias voltage on the DUT. Let's say the desired modulation is to put a sine wave riding on top of the dc. In the automotive world, this test is called alternator whine, where a small sine wave rides on the 12-V dc nominal voltage. The sine-wave amplitude could be 0.5 V p-p, and the frequency is swept up to 20 kHz.

The required current is I = C * dV/dt. If the frequency is 20 kHz, and the voltage swing is 0.5 V, then the approximate dV/dt is 0.5 V/(1/(2 * 20,000 Hz)) = 20,000 volts per second. With C of 1000 µF, it would take 20 A (= C * dV/dt = 1000 uF * 20,000 volts per second). While 20 A is not a large number, it is not related at all to the nominal dc current.

Even if the DUT only required 1 A nominal, the dc source would still need to be able to source and sink 20 A just to drive the capacitor up and down by 0.5 V at 20 kHz. If you wanted to put 1 MHz of noise instead, the current would soar to 1000 A.

SUMMARY

When changing the voltage on capacitors, you need to consider how much current will be required. And that current can grow quite large as the capacitor gets large or as the desired rate of change of voltage gets large.

BOB ZOLLO is a product planner with the Power and Energy Division, Electronic Measurements Group at Agilent Technologies. He holds an EE degree from Stevens Institute of Technology.